EVOTECH®
PERFORMANCE

www.evotech-performance.com

Honda CBR650R Tom Tom Satnav Mount Installation Instruction

Ⓐ 1 x Main Plate
Ⓑ 1 x Pivot Plate
Ⓒ 1 x Sub Mounting Bracket
Ⓓ 2 x M5 x 8mm Black Button Head Bolts
Ⓔ 2 x Lobe Screw
Ⓕ 2 x Locking Washer
Ⓖ 2 x P-clips (No.1)
Ⓗ 2 x P-clips (No.2)
Ⓘ 2 x P-clips (No.3)
Ⓙ 2 x P-clips (No.4)
Ⓚ 2 x M5 Black Washer
Ⓛ 2 x M4 x 5mm Black Button Head Bolts
Ⓜ 4 x M5 x 12mm Black Button Head Bolts

ⒶⒶ 2 x M8 x 45mm Flange bolt

EVOTECH PERFORMANCE

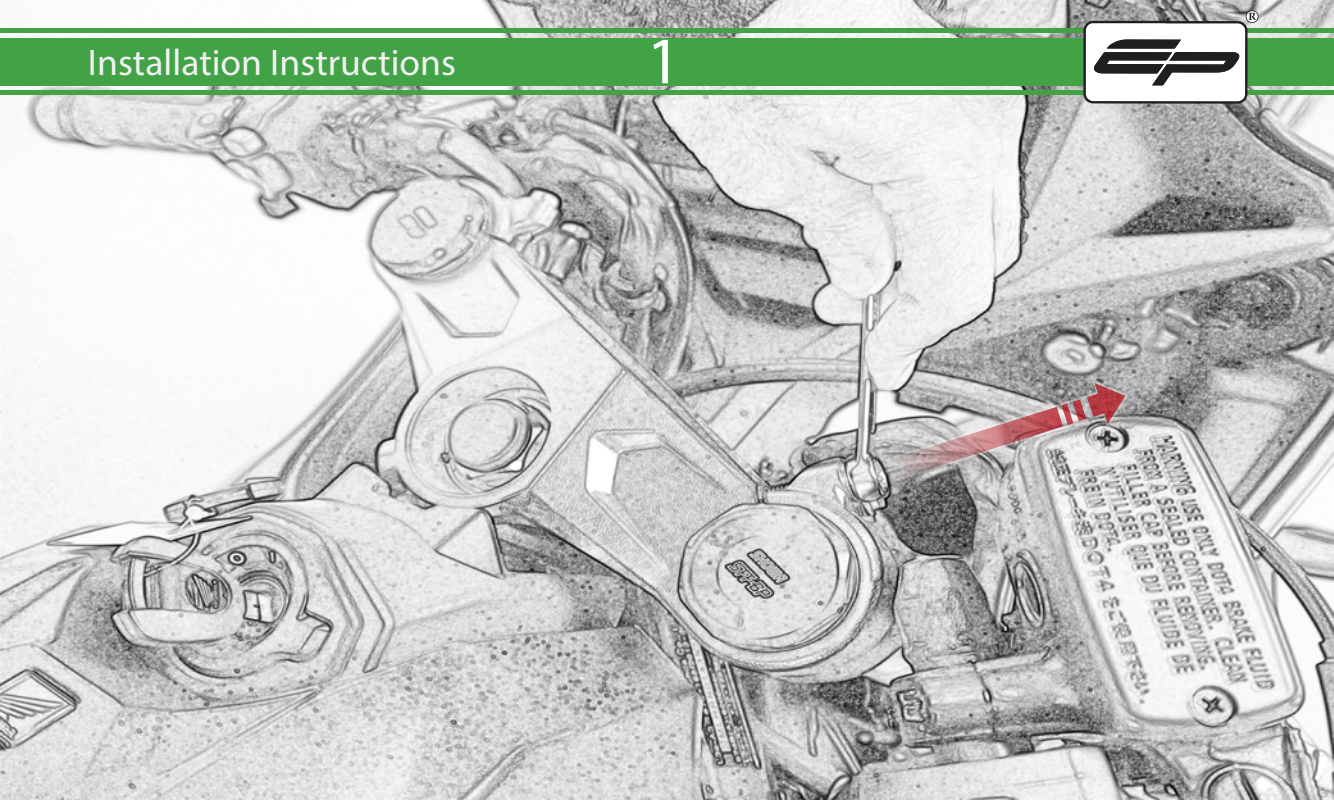
WARNING USE ONLY DOT4 BRAKE FLUID
FROM A SEALED CONTAINER. CLEAN
FILLER CAP BEFORE REMOVING.
N'UTILISER QUE DU FLUIDE DE
FREIN DOT4.

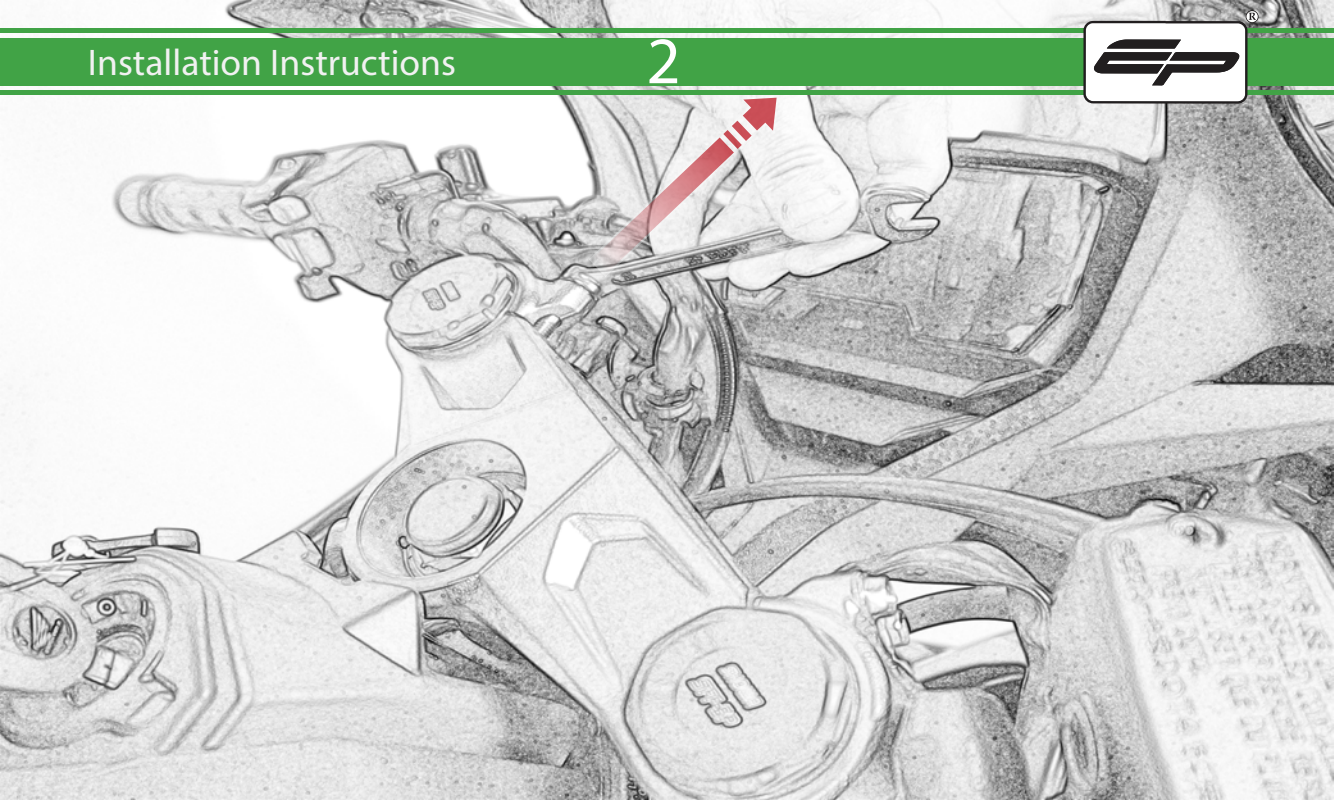

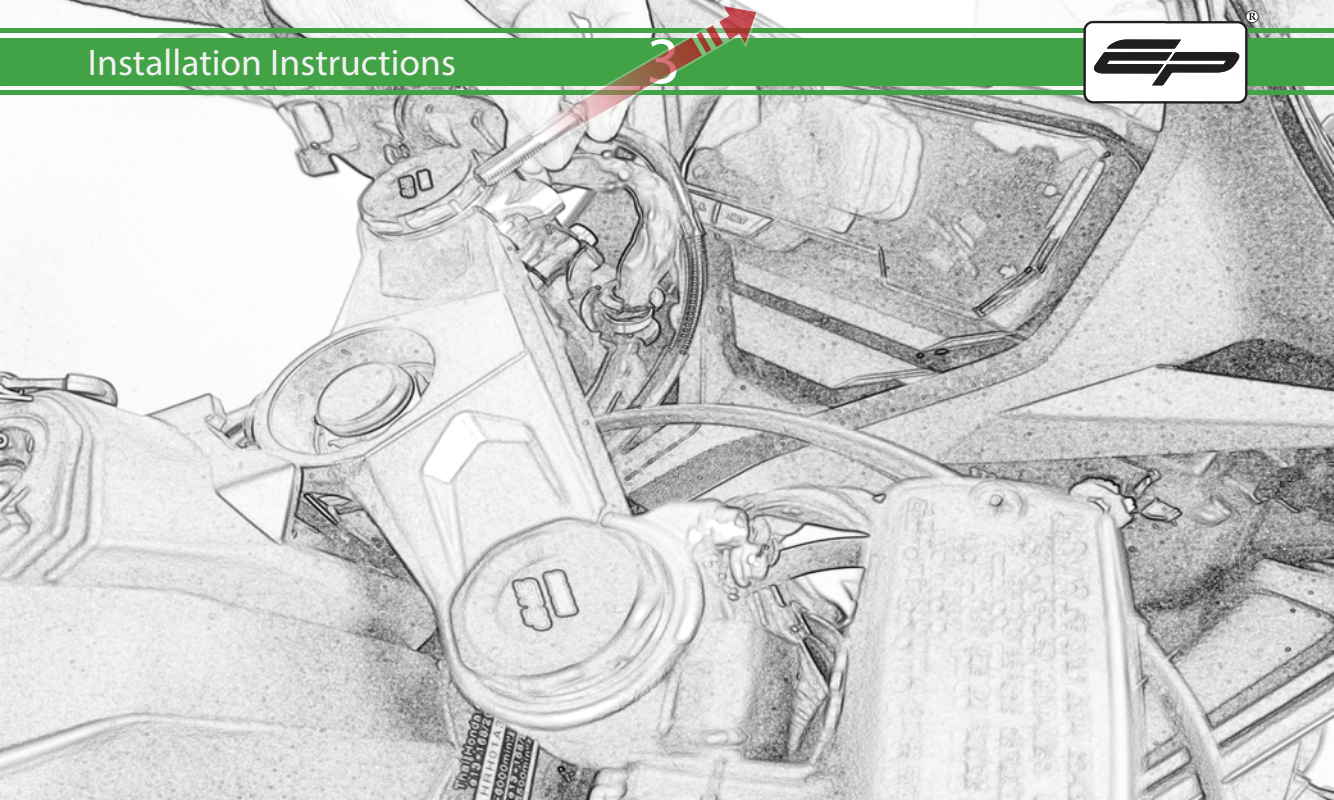

Installation Instructions 4

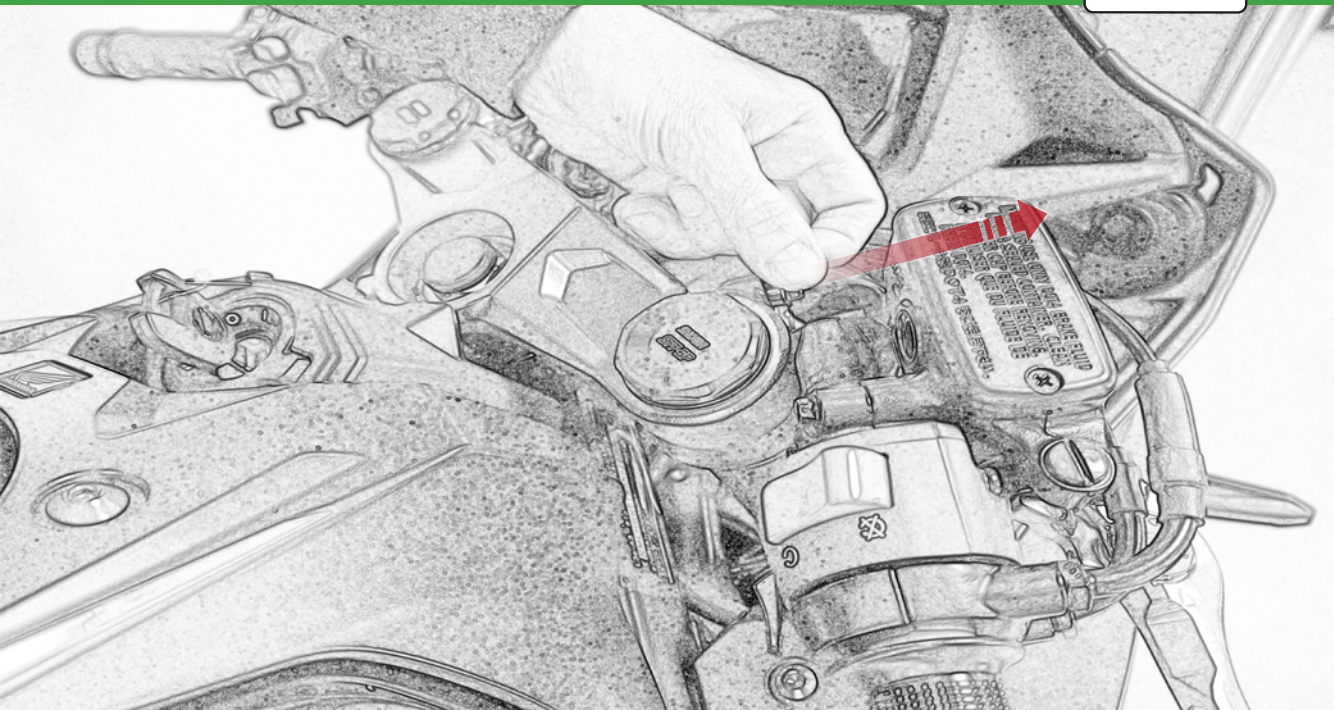

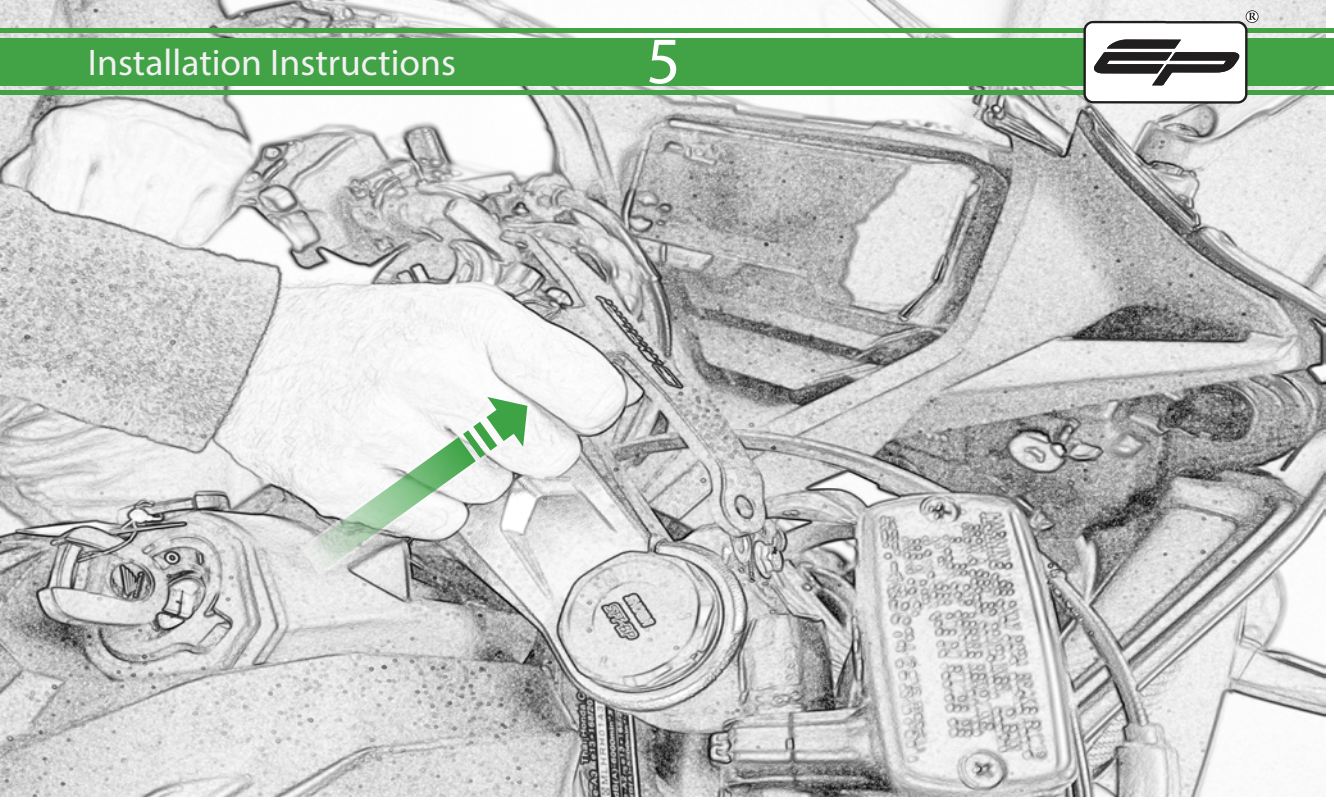

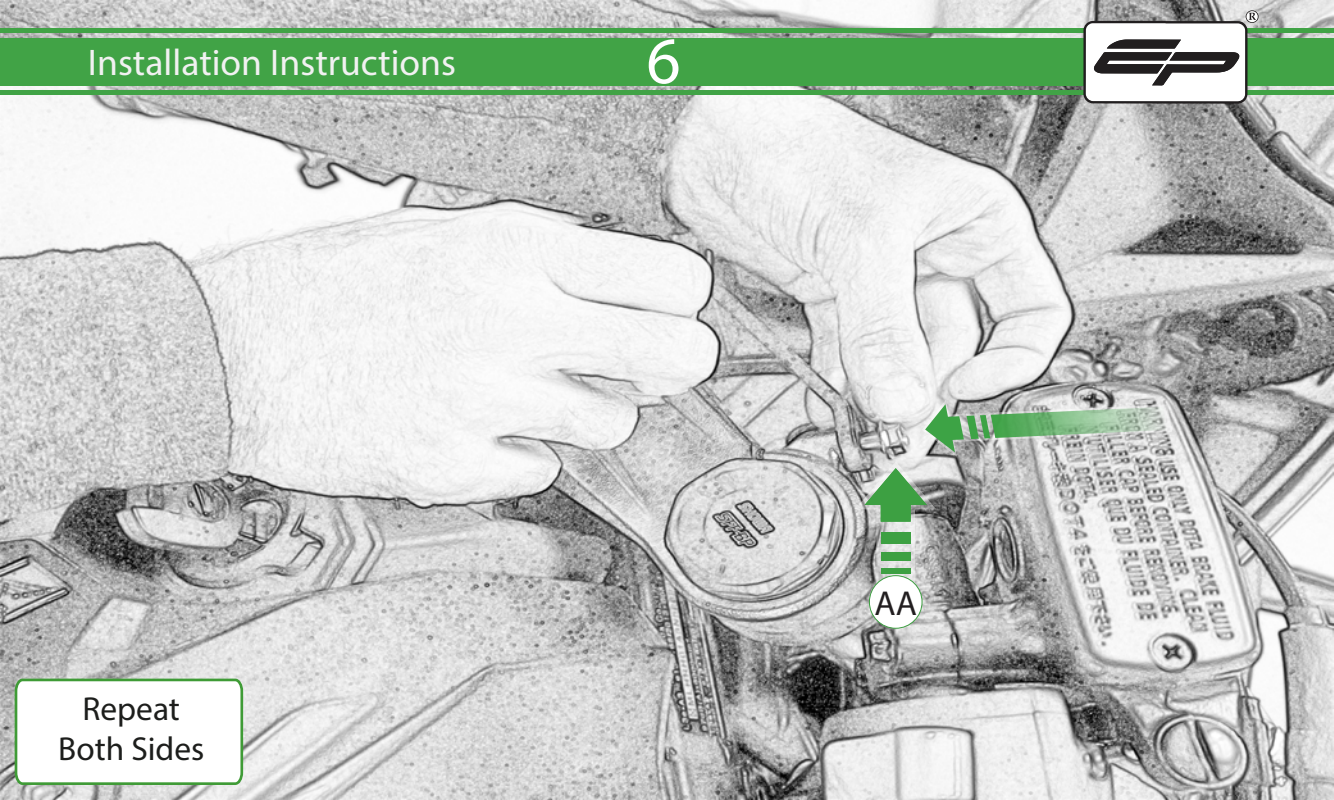
AA
Repeat
Both Sides

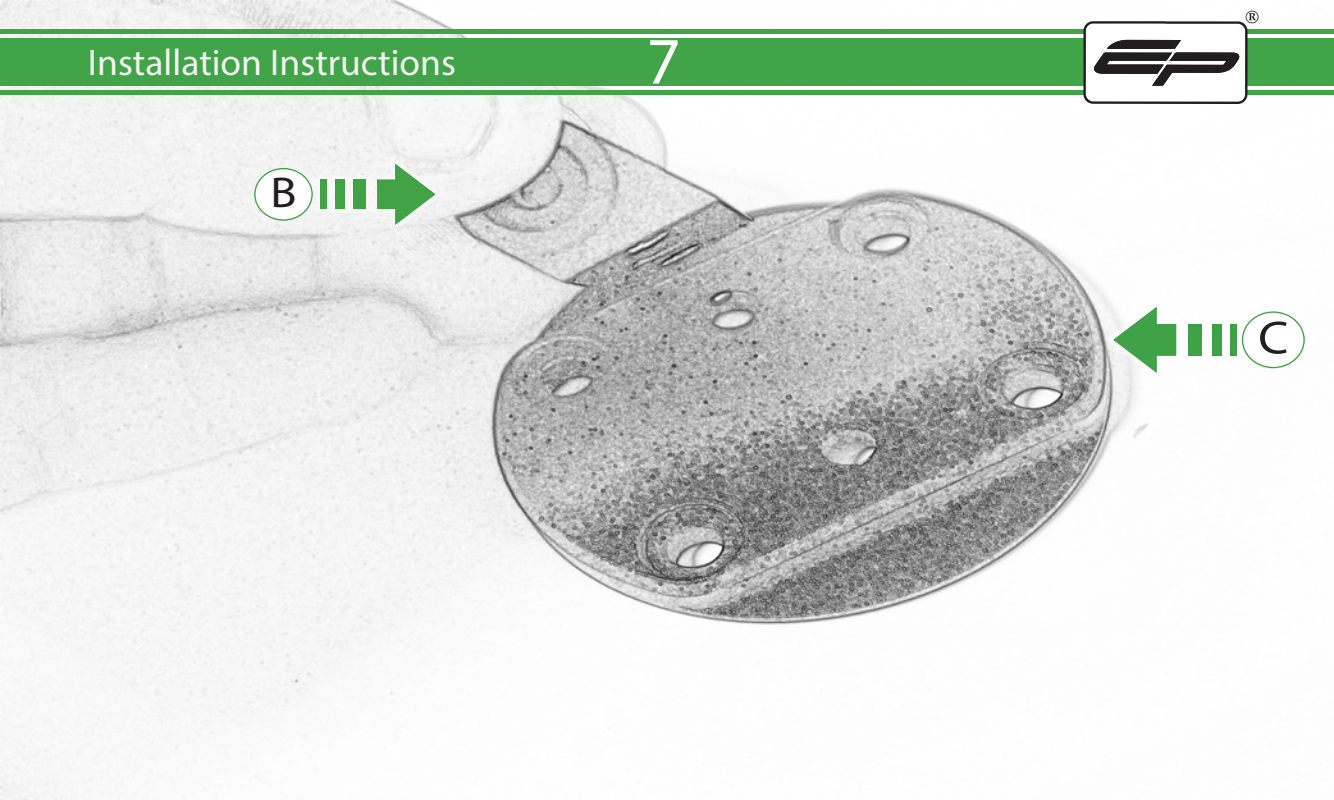
B
C

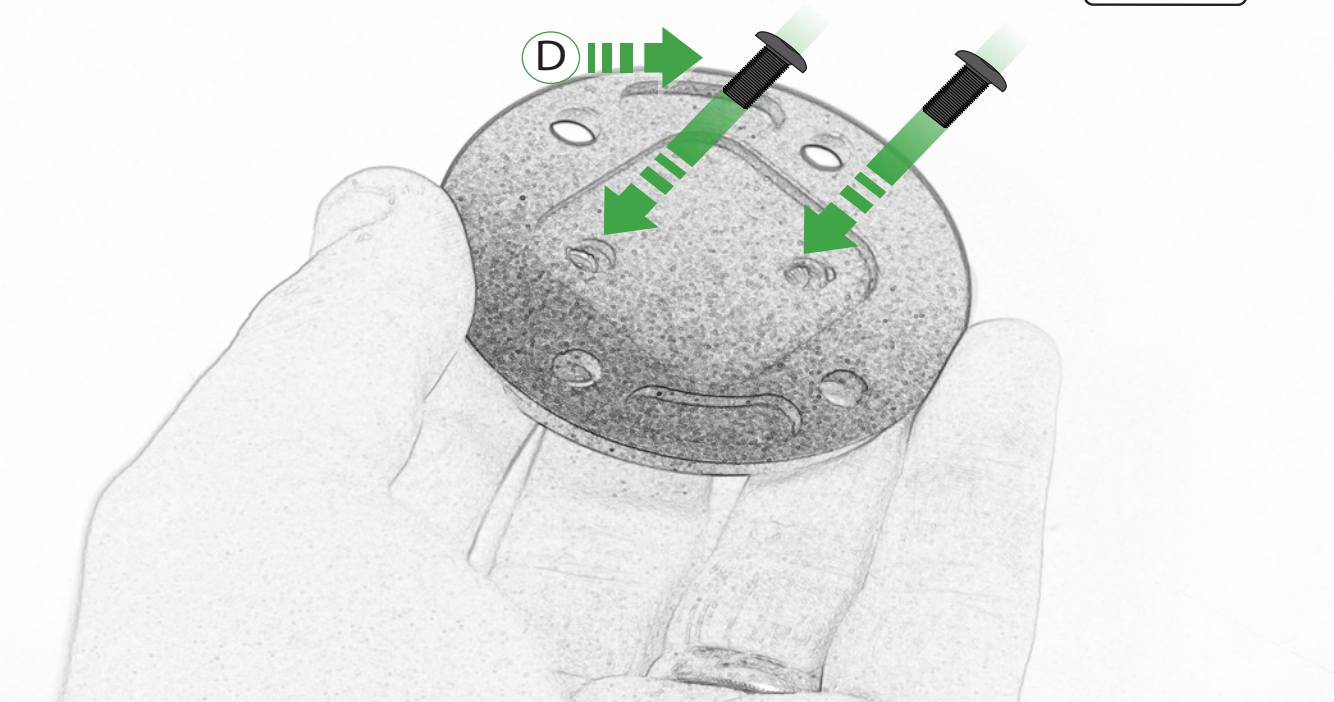
D

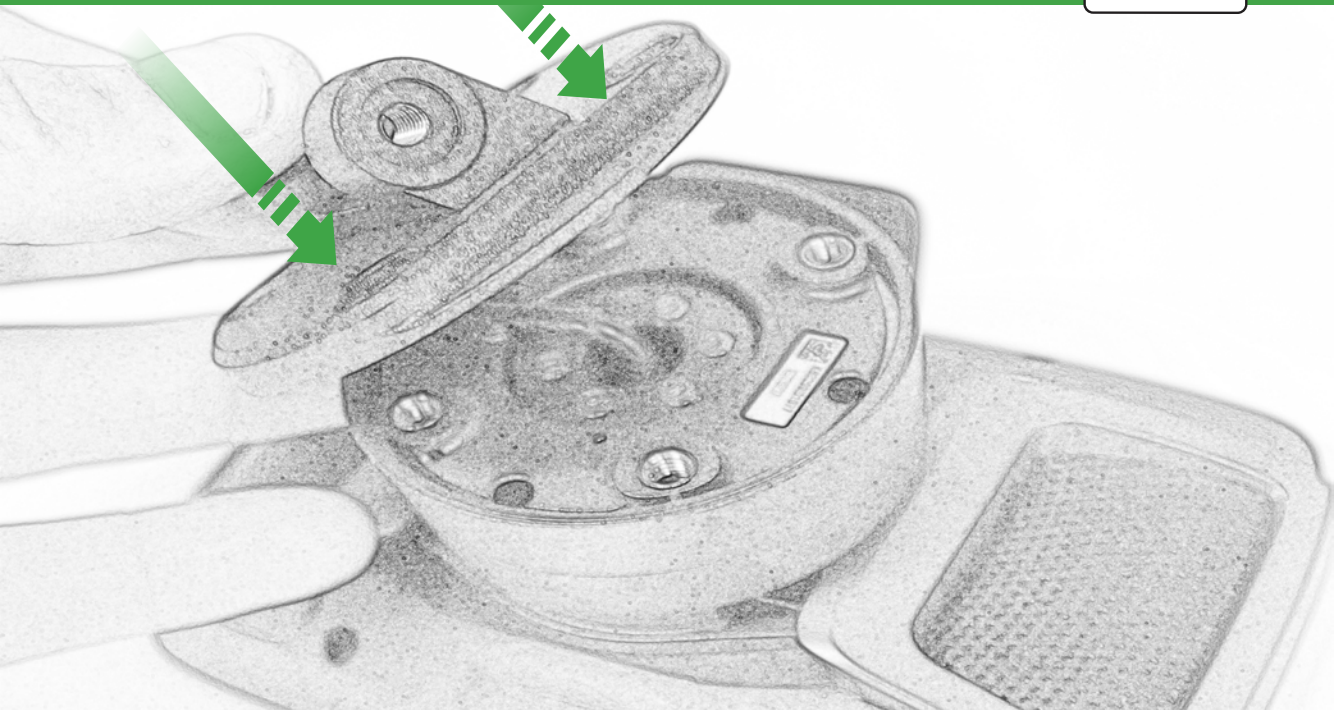

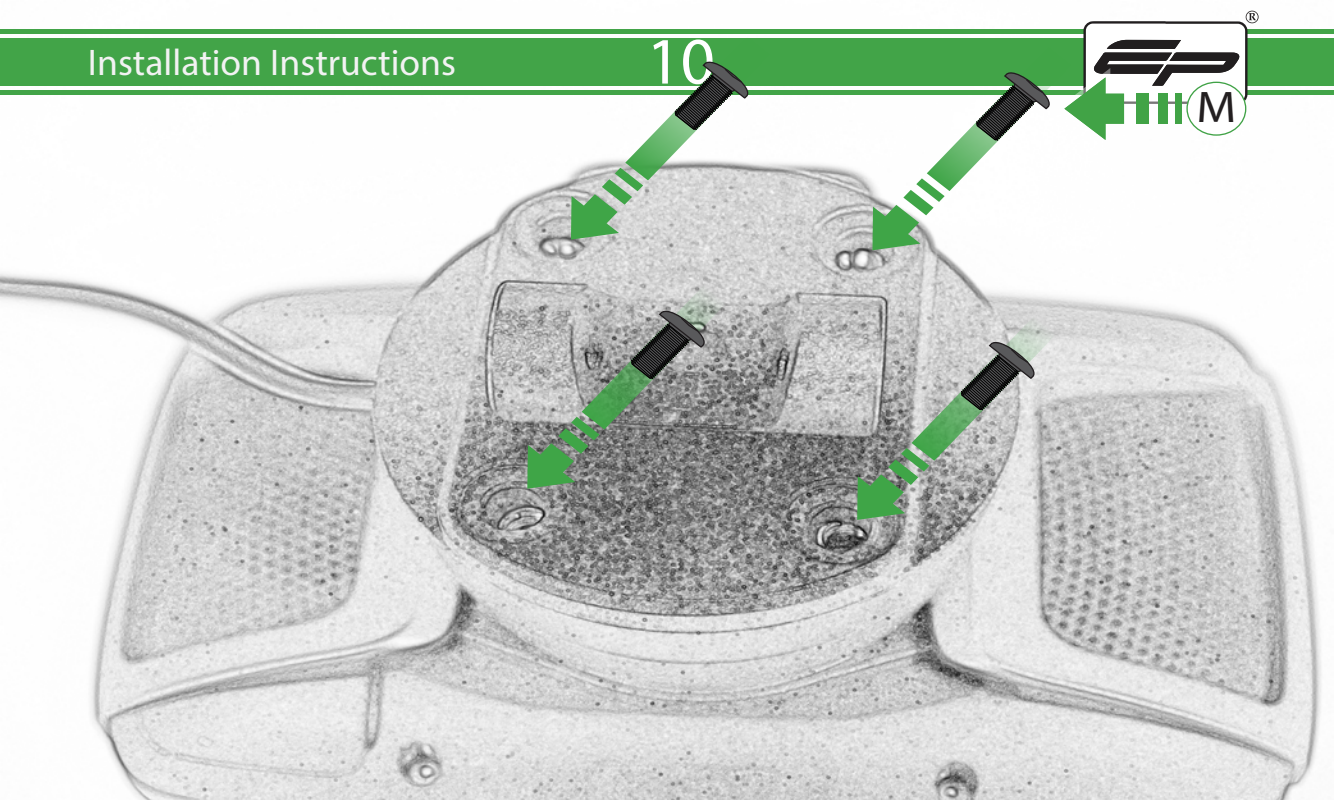

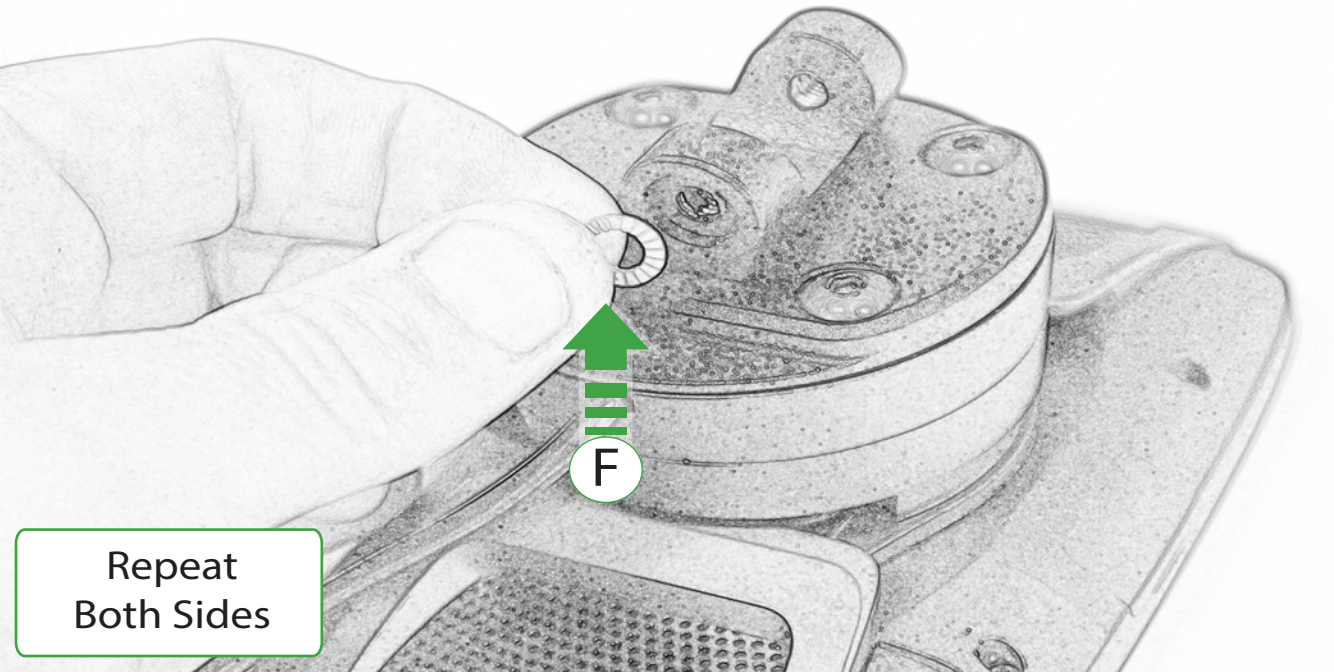
F
Repeat
Both Sides

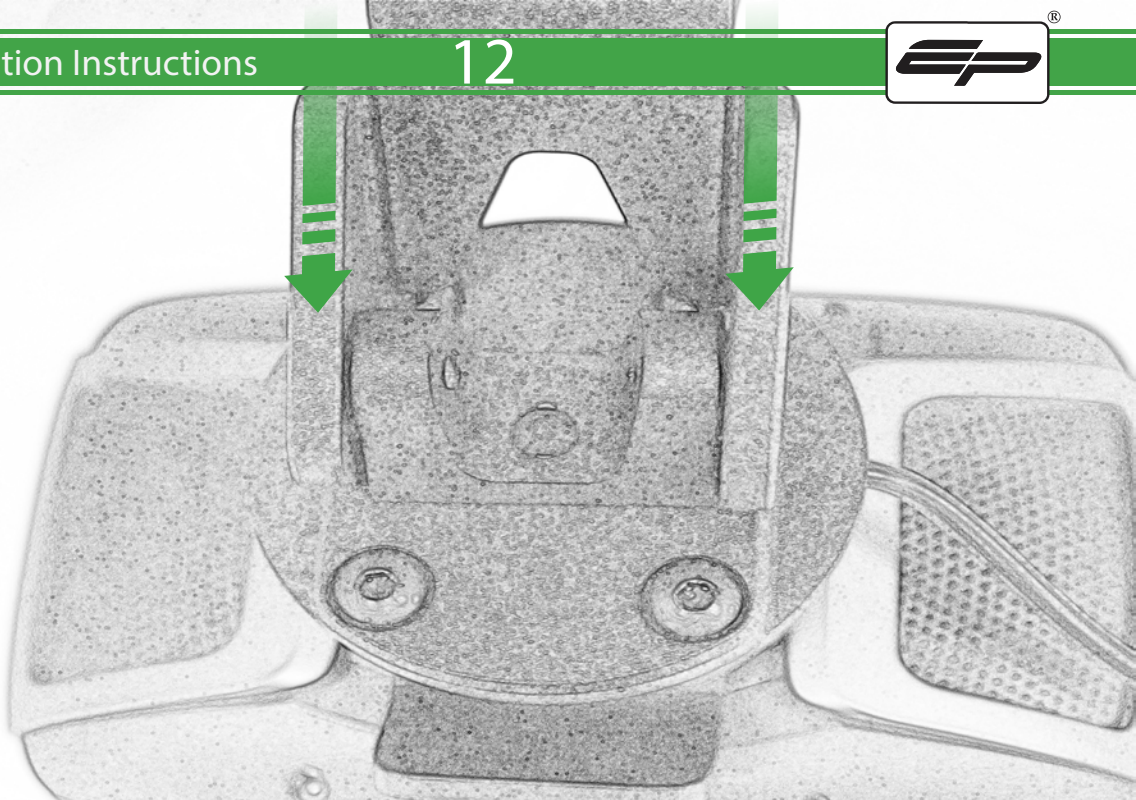

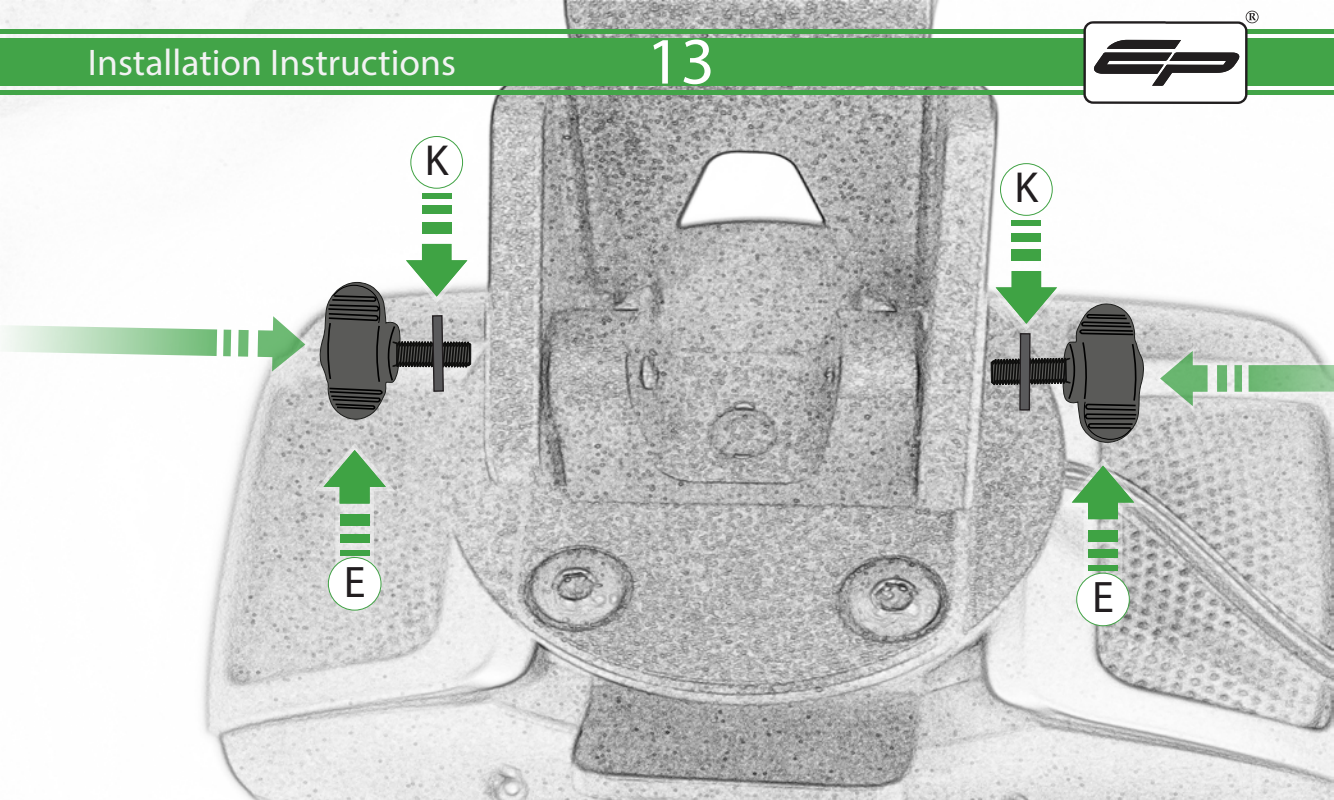
K
K
E
E

ESSENTIAL CHECKS

It is recommended that periodic inspections are made to ensure that all bolts are tightend to the specified torque settings.

Should the bike be involved in an accident a thorough inspection should be made and any components that have taken an impact, no matter how small, be replaced

EVOTECH PERFORMANCE

EVOTECH®
PERFORMANCE
www.evotech-performance.com